A Gaseous Beam Monitor for the CSR External-Target Experiment

Hulin Wang[1], Zhen Wang[2], Chaosong Gao[1], Jun Liu[1], Chengxin Zhao[3]

On behalf of the CEE Beam Monitor Group

1. Central China Normal University
2. Guizhou Normal University
3. Institute of Modern Physics, Chinese Academy of Sciences

The 6th international conference on particle physics and astrophysics

MEPhI, Moscow

Dec 2, 2022

Outline

- Introduction
- Design of the CEE Beam Monitor
- First Prototype
- Second Prototype
- Summary and Outlook

CEE at HIFRL-CSR

Heavy Ion Research Facility in Lanzhou
Cooler-Storage-Ring system

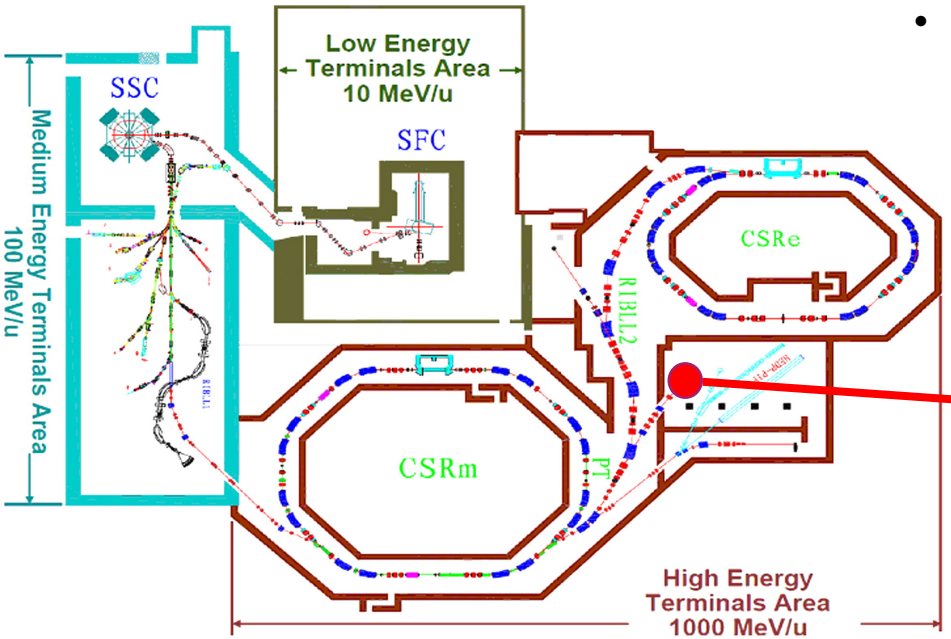

CSR External-Target Experiment

- Study the properties of cold nuclear matter at high baryonic density
- Construction time: 2020-01 to 2024-12
- Lowest (highest) beam energy: 0.3 (2.8) GeV/u
- Maximum system: U+U
- Maximum event rate: 10^4 s^{-1}

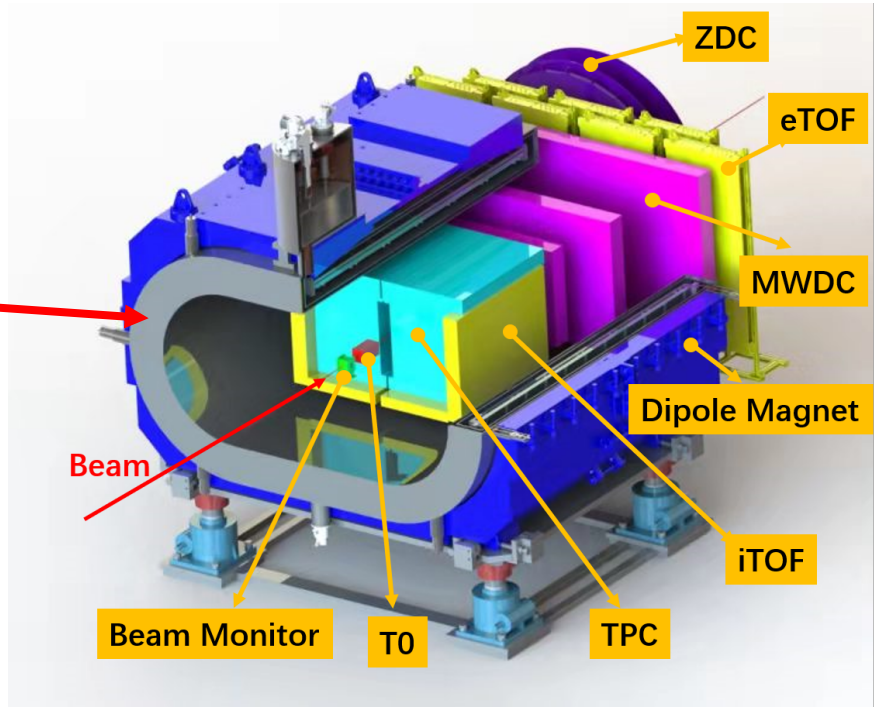

Beam Monitor of CEE

- Placed upstream of the fixed target
- Measure the position of each beam particle
- Used in vertex reconstruction (combined with TPC and MWDC)
- Main design parameters:
  - Position resolution : 50 μm
  - Minimum time separation of two particles: 1 μs
  - Sensitive area: 30×30 mm^2

- Two field cages in a gas vessel, each measuring 1-D transverse coordinate
- Custom-designed Topmetal chip as anode for charge sensing and readout
- Direct charge sensing for heavy ionizing particles e.g. U, Xe
- Single-layer GEM for less ionizing particle e.g. C (not shown in the plot)

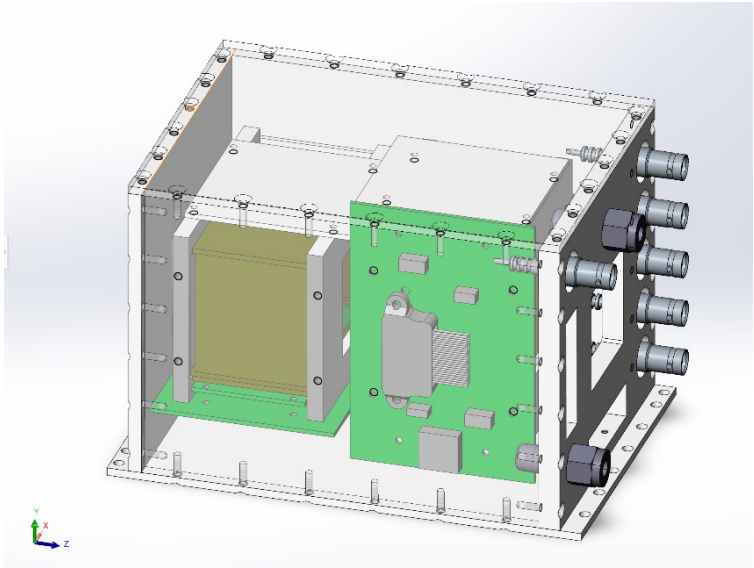

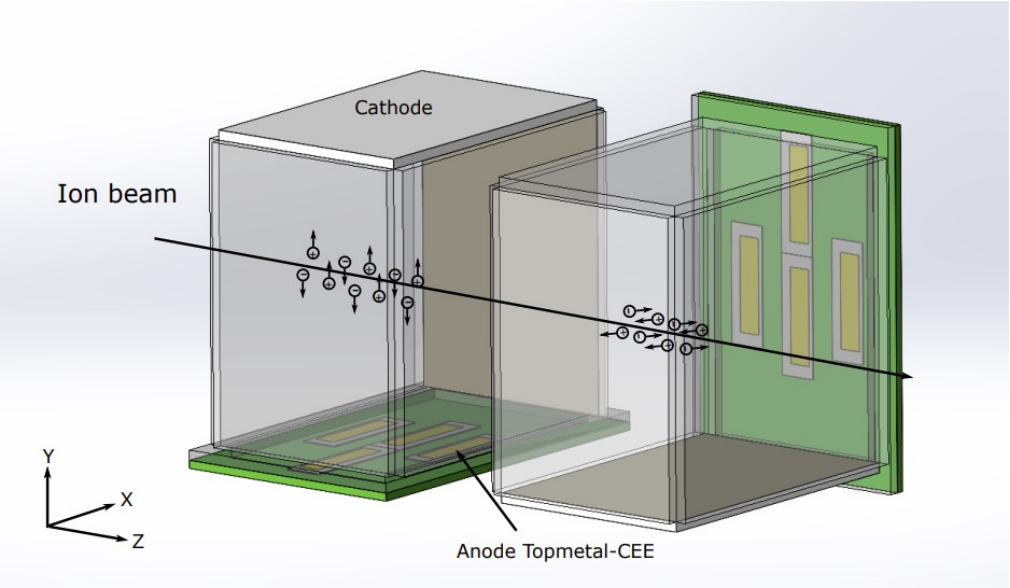

Simulation study of the beam monitor is described in the Poster of Fei and Zhen.

First Prototype: Topmetal-II- chip

- CMOS 350 nm
- 72×72 pixel matrix
- Pixel size: 83.2×83.2 μm^2
- Rolling shutter readout
- Top exposed metal size per pixel: 15×15 μm^2
- Analogue output + off-chip DAC

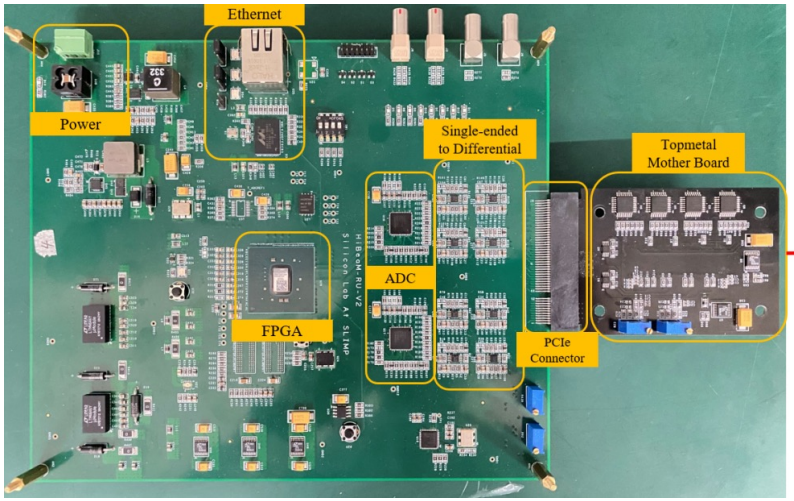

Back

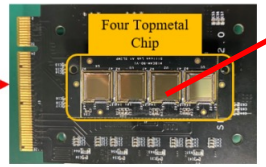

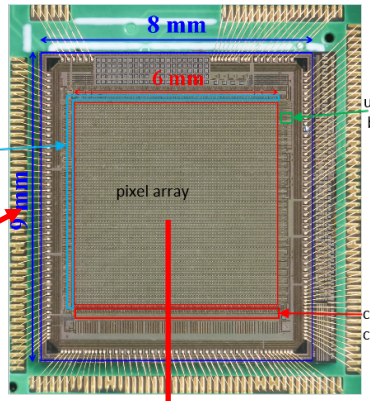

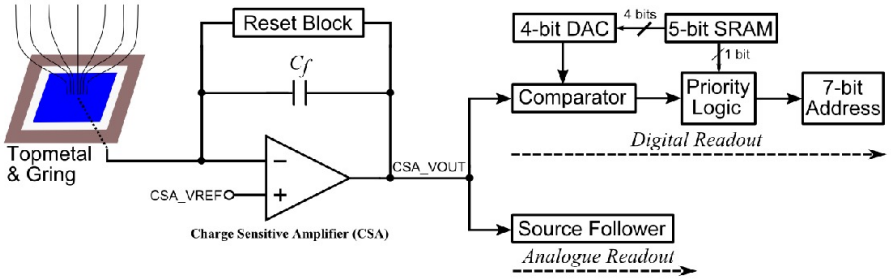

First Prototype: lab test

Nucl. Sci. Tech. (2022) 33:36

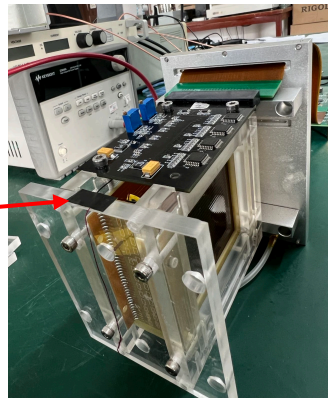

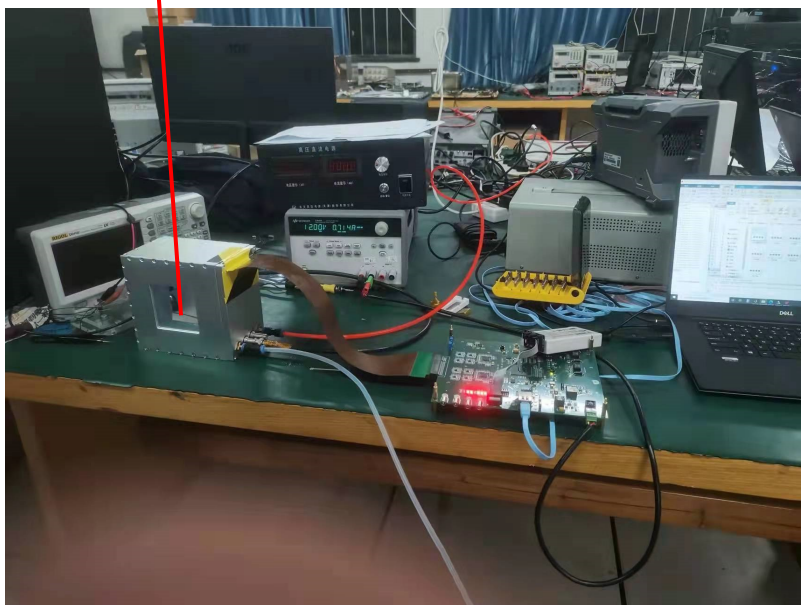

- Test with α particle from ^{241}Am
- Ar-CO_2 (70:30) gas

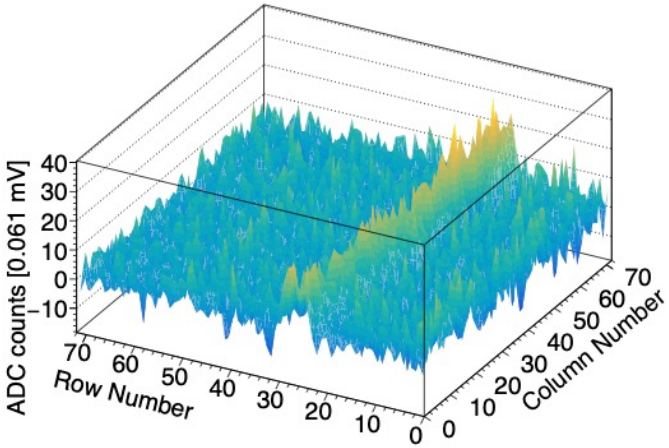

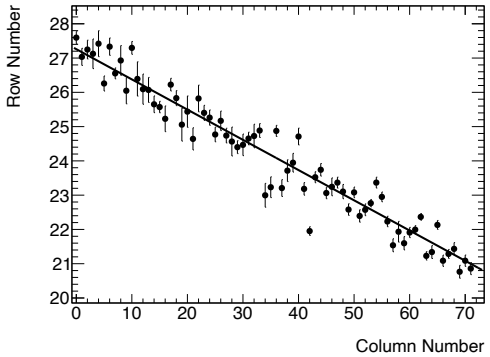

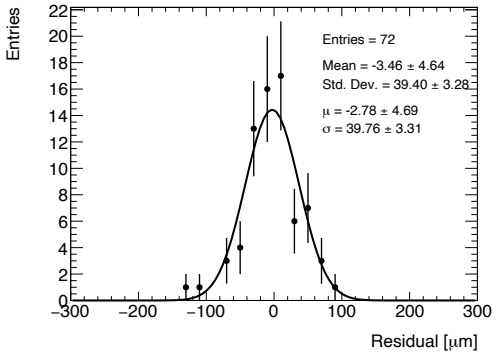

First Prototype: beam test

- $^{40}Ar^{18+}$ beam test at HIFRL-CSR
- In Air and Ar-CO_2 (70:30)

- Two adjacent (4 ms) frames in Air
- $^{40}Ar^{18+}$ at ~ 100 MeV/u

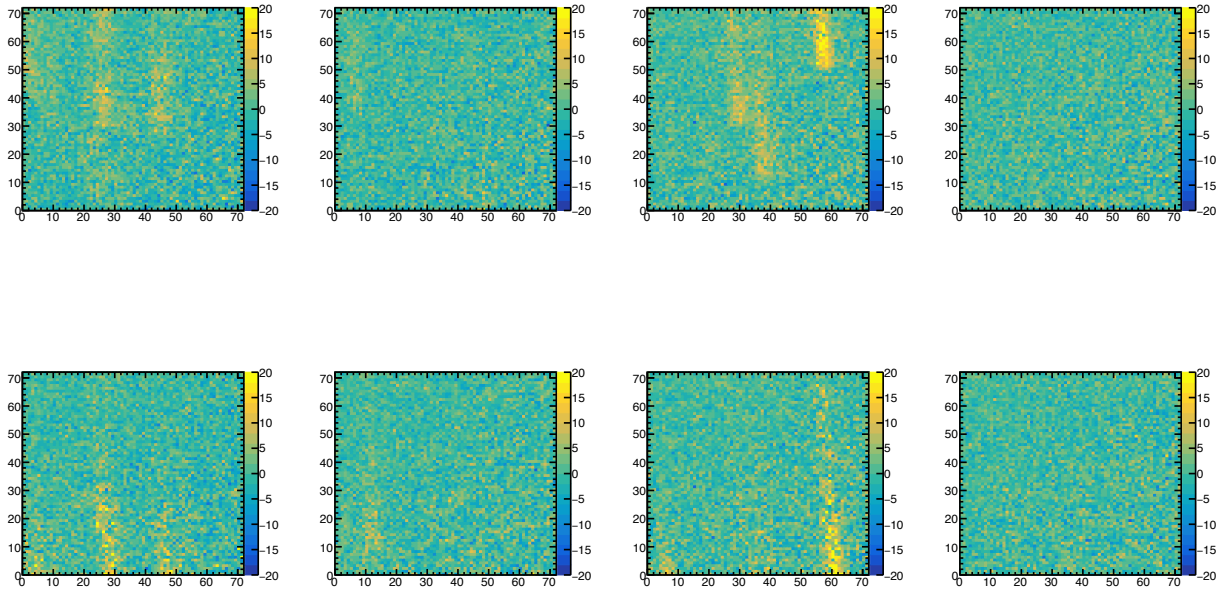

Second prototype: Topmetal-CEEv1 chip

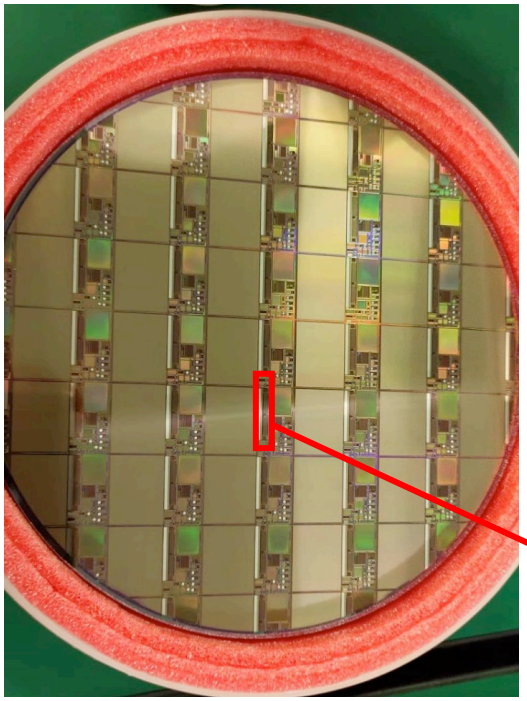

NIMA 1047 (2023) 167786

The main features of the Topmetal-CEEv1 chip.

Feature size	130 nm
Chip area	4.2 mm ×19 mm
Number of pixels	1 × 180
Pixel pitch	100 μm
CCE size	1 mm ×89 μm
Shaping time (tunable)	~ 0.5 μs to 2 ms
Peaking time	~ 100 ns
Readout scheme	Data-driven readout
Readout time	25 ns/pixel
Amplitude measurement	TOT method

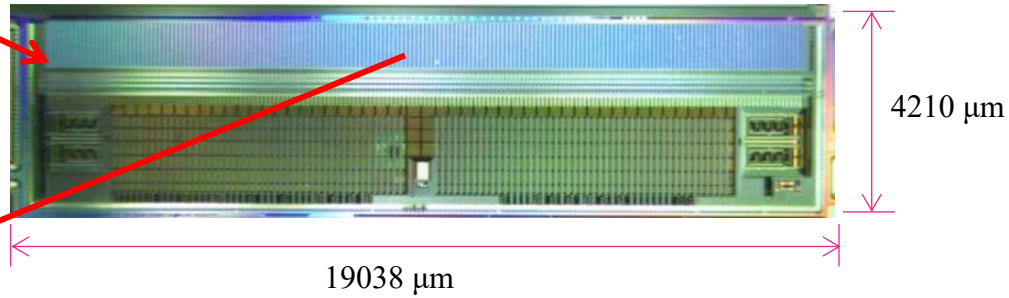

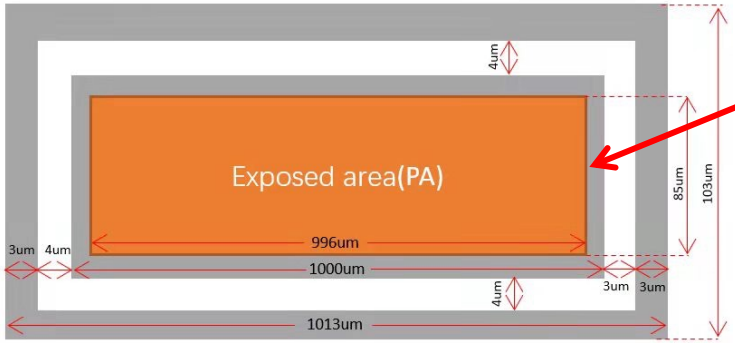

Second prototype: Topmetal-CEEv1 chip

Front-end circuit:

- Three gains for ions of different ionizing density
- Discriminator with local DAC for per-pixel adjustment
- Time-over-threshold signal for amplitude measurement
- Output signals sent to priority logical circuit for hit-driven readout

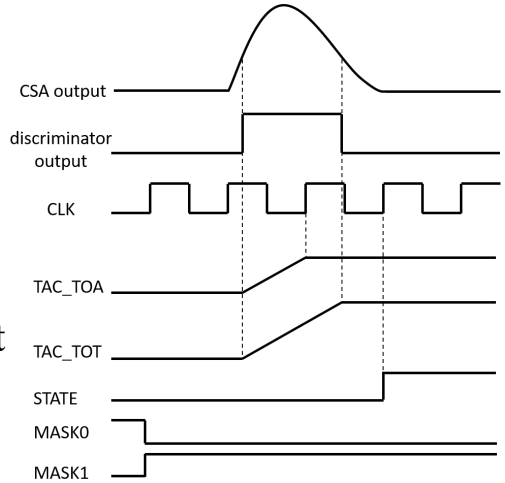

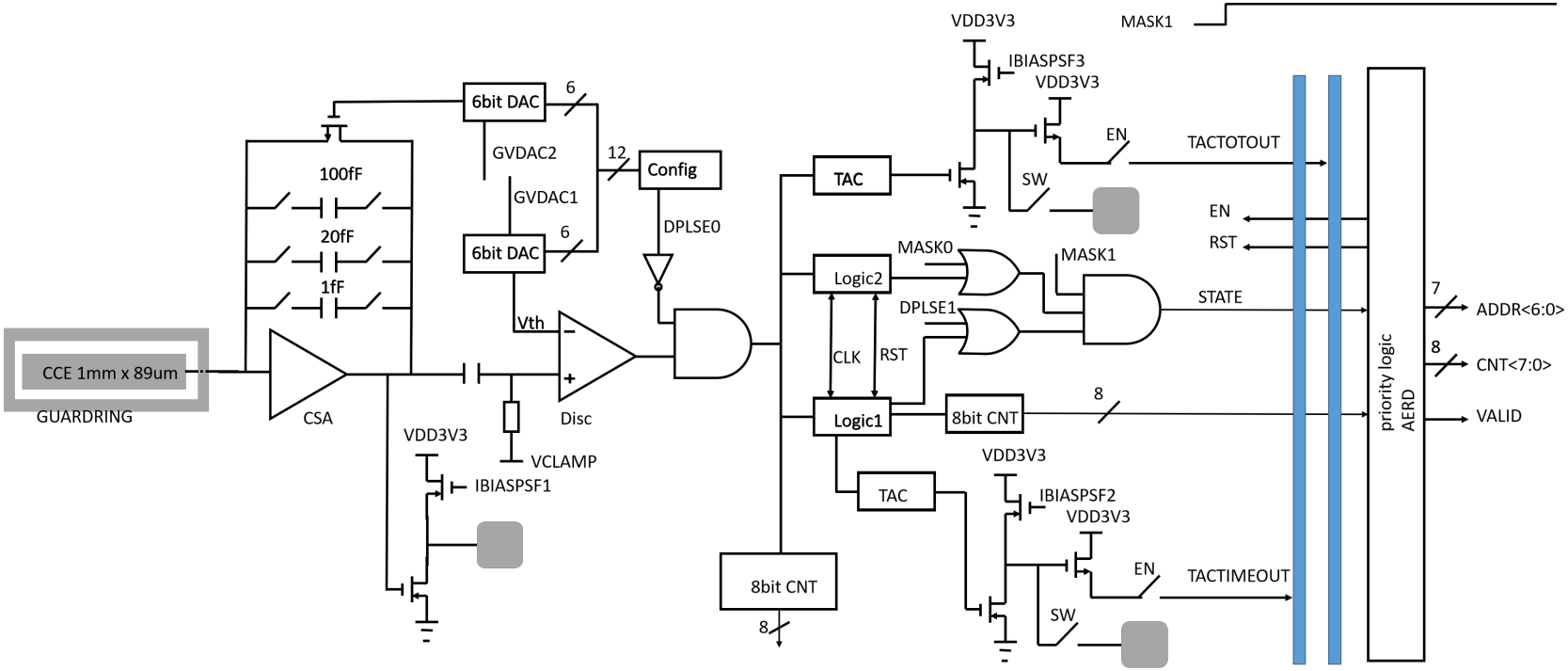

Second prototype: Topmetal-CEEv1 chip

- Linearity of CSA:

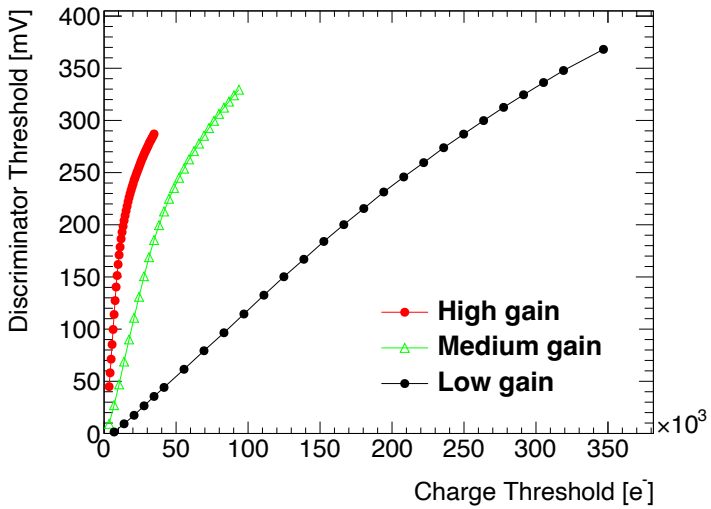

- Time stability:

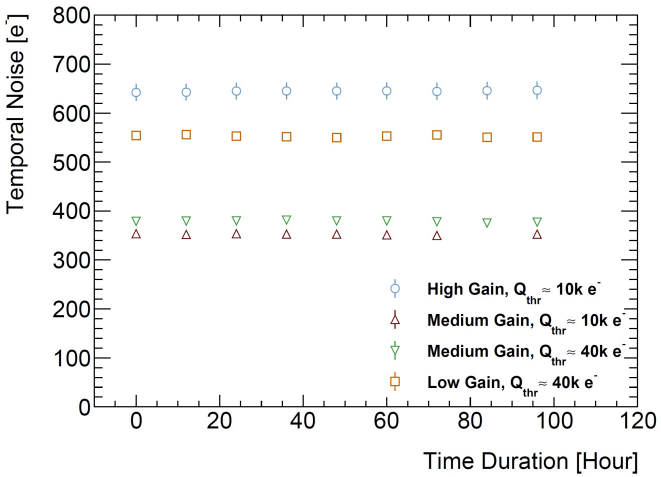

- TOT:

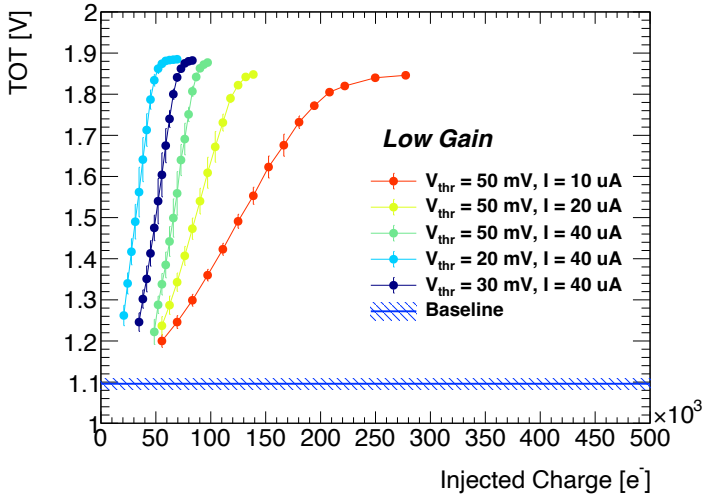

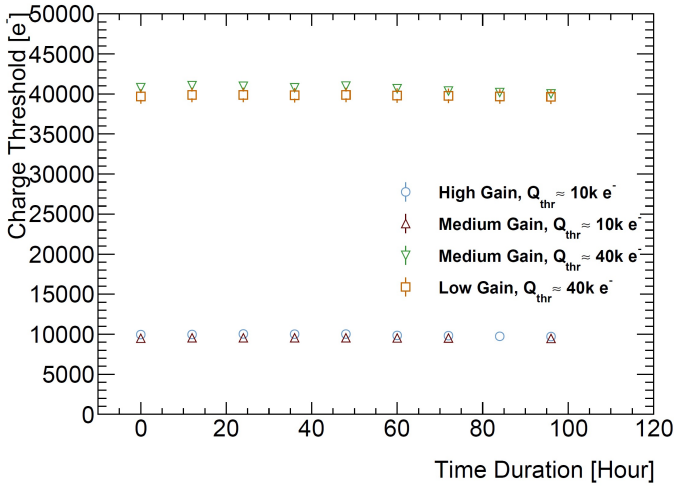

Second prototype: system

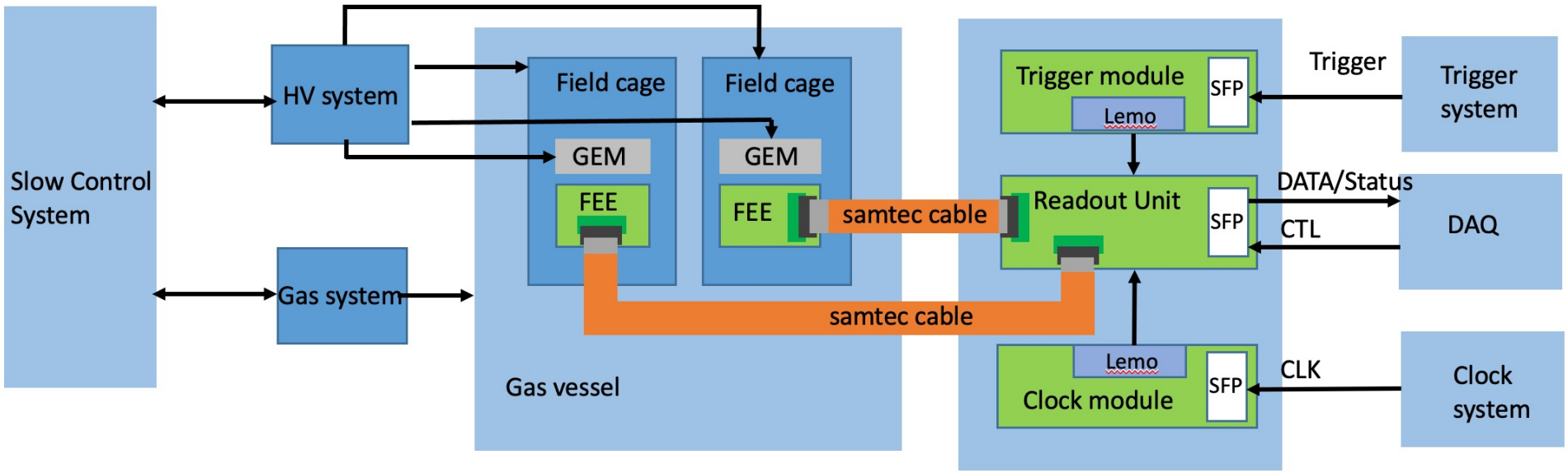

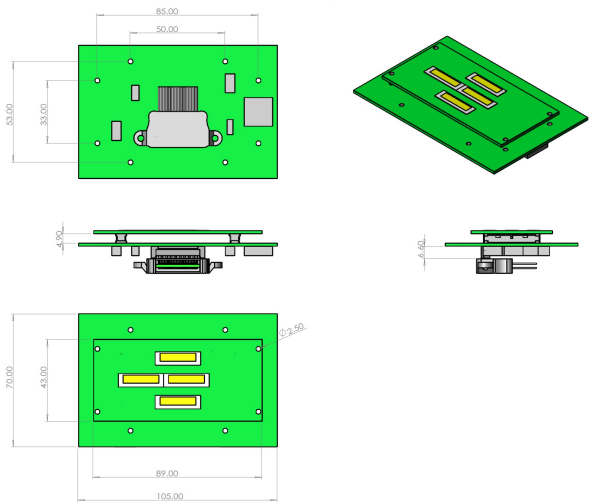

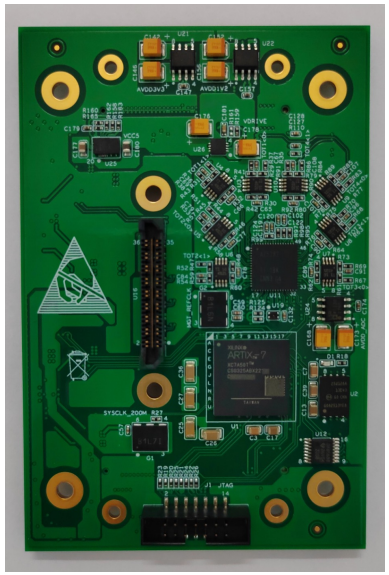

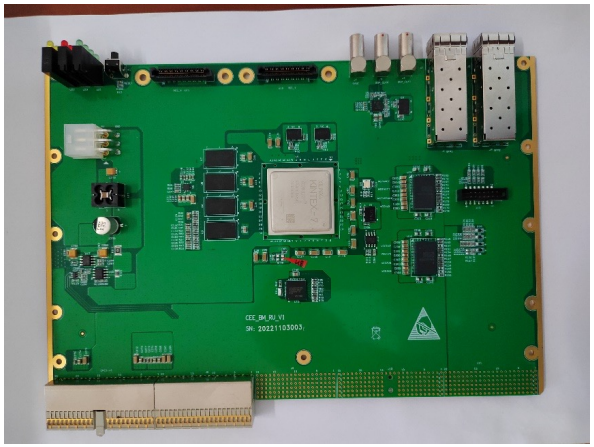

Summary and Outlook

- Gaseous beam monitor, part of the CEE experiment, is under development.
- It features Topmetal chips for charge sensing and readout in the gas.
- First prototype, utilizing Topmetal-II- chip, has been built and tested.
- Second prototype, utilizing custom-designed Topmetal-CEE chip, is being assembled. The chip has been tested in the lab. System tests on the way.