VIII International Conference on Particle Physics and Astrophysics

October, 2026, Moscow, Russia

Radiative corrections and effects of new physics in neutrino-matter scattering processes

Elena V. Kovalevskaia

E-mail: gyppmn@gmail.com

Faculty of Physics, Lomonosov Moscow State University, Moscow 119991, Russia

Introduction and Motivation

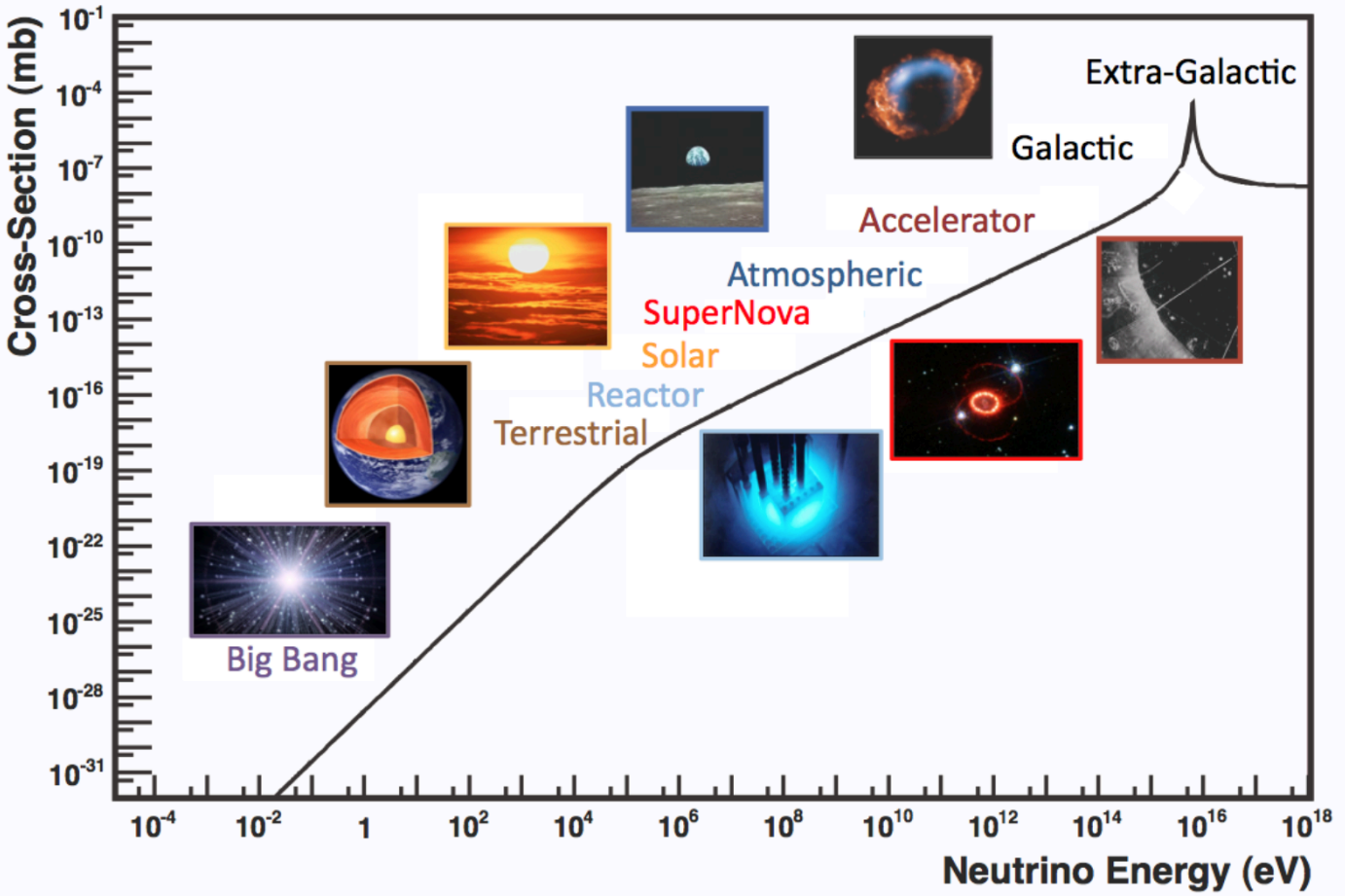

Formaggio, J. A., & Zeller, G. P. (2012). From eV to EeV: Neutrino cross sections across energy scales. *Reviews of Modern Physics*, *84*(3), 1307-1341.

Neutrinos are often referred to as the universe's 'ghost particles'. Born in the cores of stars, supernova explosions, and the accretion disks of supermassive black holes, they carry almost no mass, have no electric charge, and interact so weakly that a single neutrino could traverse a light-year of solid lead without touching an atom! This makes them pristine cosmic messengers, delivering uncorrupted information from the most distant corners of the cosmos.

Introduction and Motivation

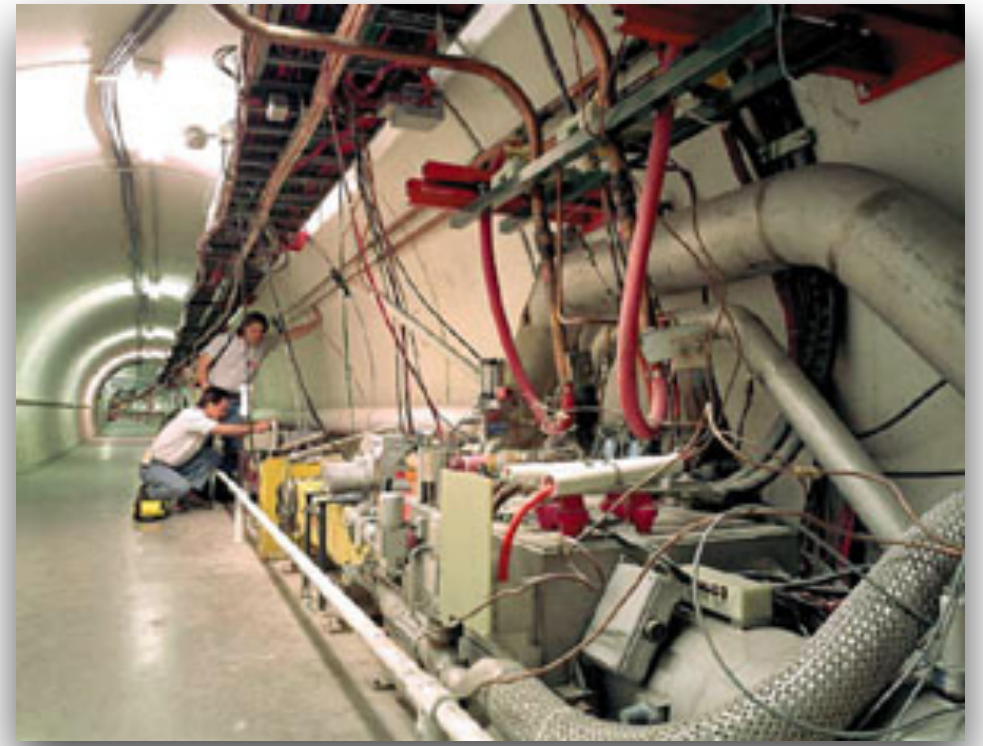

Part of the 4-mile tunnel housing Fermilab's superconducting Tevatron proton-antiproton collider.

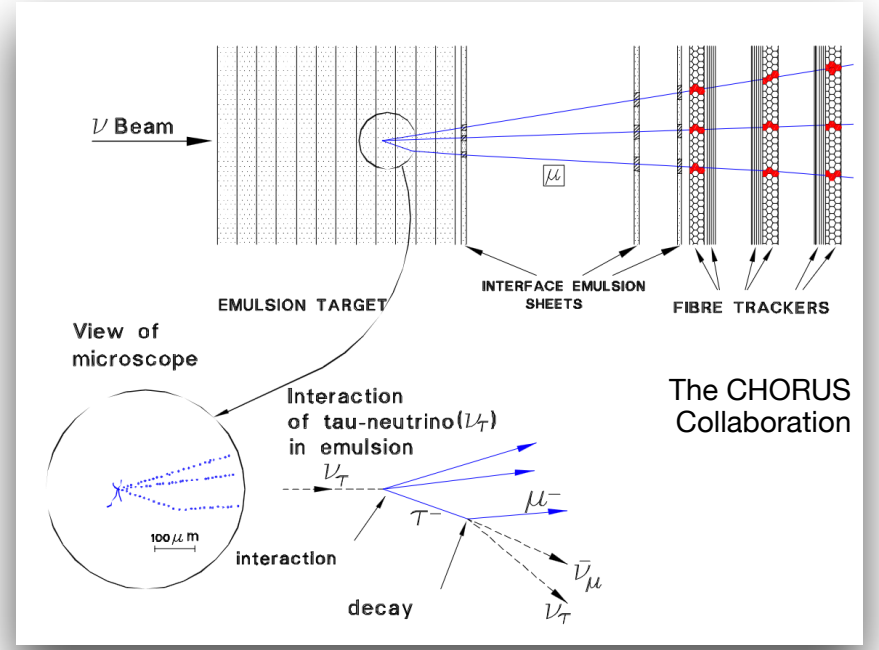

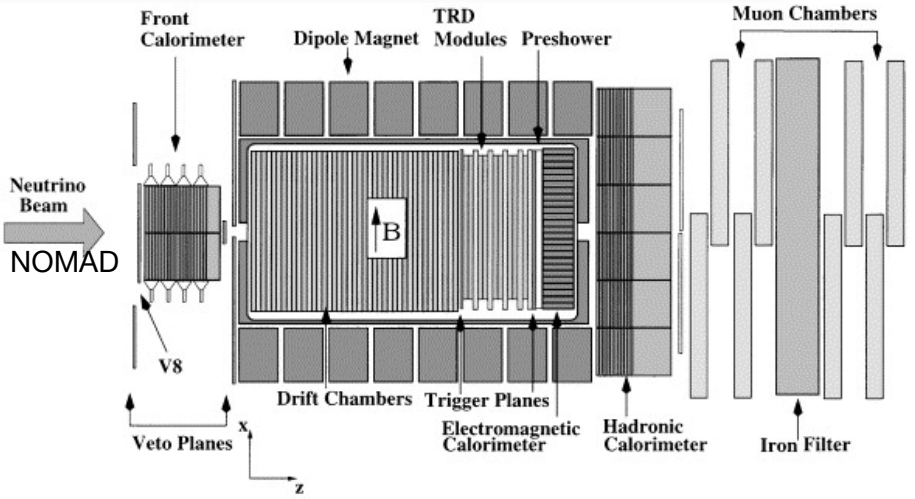

The Role of Deep Inelastic Scattering (DIS)

Why do we focus specifically on Deep Inelastic Scattering (DIS)?

Neutrino-nucleon DIS occupies a central position in high-energy physics for *four* ***key reasons***:

1) a microscope for hadron structure: At high momentum transfer Q^2, the neutrino's short de Broglie wavelength allows it to penetrate deep inside the proton to interact directly with point-like quarks, revealing their parton distribution functions (PDFs).

2) precision tests of the Standard Model: The purely left-handed V-A structure of weak currents allows us to separate quark and antiquark contributions. In fact, neutrino DIS was instrumental in determining the weak mixing angle, $\sin^2\theta_W$.

3) key to ultra-high-energy astrophysics (IceCube): At PeV-scale energies, DIS is the dominant interaction channel for cosmic neutrinos in Antarctic ice.

4) a window into BSM physics: Any observed deviations from theoretical predictions serve as direct probes for leptoquarks or non-standard interactions (NSI).

Kouzakov K., Kovalevskaia E., Studenikin A. Electromagnetic Effects in Deep Inelastic Neutrino-Proton Scattering //Springer Nature Switzerland, 2023. – C. 227-230.

Why Are Radiative Corrections Necessary?

When experimental precision reaches the 1% level, theoretical calculations must match or exceed that accuracy.

What are radiative corrections? They are higher-order quantum field theoretical corrections that account for virtual quantum fluctuations in vertices and propagators—including loop diagrams, particle self-energies, and the emission or absorption of real or virtual gauge bosons. By 'clothing' bare tree-level particles in a cloud of virtual interactions, particles acquire Q^2 -dependent form factors and running coupling constants. In the electroweak sector, vertex, self-energy, and box diagrams contribute several percent to physical observables, shifting the effective Fermi constant. Furthermore, virtual quantum loops are sensitive to heavy particles that cannot be produced directly due to energy constraints.

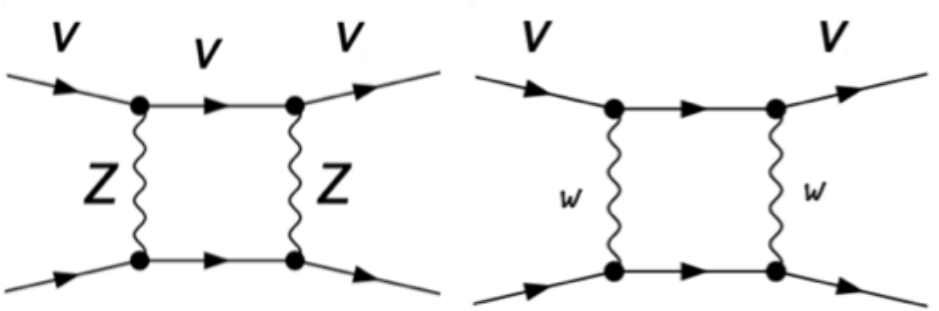

+ self-energies
+ exchange diagrams
+ other diagrams of a similar type

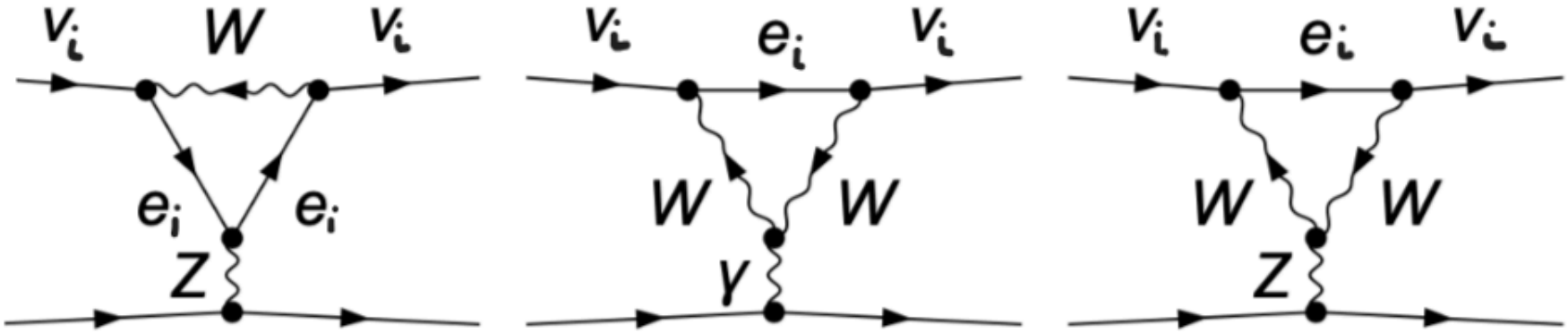

The Clifford Algebra Basis

Tensor Structure	Basis Matrix	Number of Matrices	Lorentz Transformation Property
Scalar (S)	I *(Identity matrix)*	1	Lorentz scalar
Pseudoscalar (P)	$\gamma_5 \equiv i\gamma^0\gamma^1\gamma^2\gamma^3$	1	Lorentz pseudoscalar (flips sign under parity)
Vector (V)	γ^μ	4	Lorentz 4-vector
Axial-Vector (A)	$\gamma^\mu\gamma_5$	4	Lorentz pseudovector / axial vector
Tensor (T)	$\sigma^{\mu\nu} \equiv \frac{i}{2}[\gamma^\mu, \gamma^\nu]$	6	Antisymmetric rank-2 Lorentz tensor

Electromagnetic Vertex Function

Although neutrinos are electrically neutral, virtual quantum loops endow them with a complex electromagnetic structure. Under parity violation—which is maximal for neutrinos—the most general decomposition of the electromagnetic vertex $\Gamma_\mu(p', p)$ in terms of momentum transfer $q = p' - p$ contains 4 electromagnetic form factors:

$$\Gamma_\mu(p', p) = \gamma_\mu F_Q(q^2) + \frac{i\sigma_{\mu\nu}q^\nu}{2m} F_m(q^2) + (\gamma_\mu q^2 - 2mq_\mu)\gamma_5 F_A(q^2) + \frac{\sigma_{\mu\nu}q^\nu\gamma_5}{2m} F_E(q^2)$$

Each form factor governs a distinct physical property.

C.Giunti, A.Studenikin, Neutrino electromagnetic interactions: A window to new physics, Rev. Mod. Phys. 87 (2015) 531-591;

C.Giunti, K.Kouzakov, Y.-F.Li, A.Studenikin, Neutrino electromagnetic properties, Annu. Rev. Nucl. Part. Sci. (2025) 75: 1–36;

Charge Form Factor & Neutrino Charge Radius $\langle r^2 \rangle$

Let us examine the charge form factor $F_Q(q^2)$. At tree level, the neutrino charge is zero: $F_1(0) = 0$. However, as it propagates, quantum fluctuations allow it to briefly split into a virtual W^+ boson and a charged lepton.

This creates a diffuse spatial charge distribution known as the **electroweak charge radius** $\langle r^2 \rangle$:

$$F_1(q^2) = F_1(0) + \frac{q^2}{6}\langle r^2 \rangle + \mathcal{O}(q^4)$$

Think of it like a neutral atom: while neutral overall, it possesses a positive nucleus and a negative electron cloud.

J. Bernabéu, J. Papavassiliou, J. Vidal, The neutrino charge radius as a physical observable, Nucl. Phys. B680 (2004) 450

Magnetic, Anapole, and Electric Dipole Moments

$$\Gamma_\mu(p',p) = \gamma_\mu F_Q(q^2) + \frac{i\sigma_{\mu\nu}q^\nu}{2m}F_m(q^2) + (\gamma_\mu q^2 - 2mq_\mu)\gamma_5 F_A(q^2) + \frac{\sigma_{\mu\nu}q^\nu\gamma_5}{2m}F_E(q^2)$$

The second key parameter is the magnetic form factor $F_m(q^2)$.

The third form factor is the anapole form factor $F_A(q^2)$. Due to strict left-handedness, neutrinos possess a donut-shaped toroidal magnetic field. This field only interacts with electric currents passing directly through the center of the 'donut'!

Finally, $F_E(q^2)$ corresponds to the CP-violating electric dipole moment.

Weak Neutral Vertex (Z^0)

Turning to the weak neutral vertex $\Gamma_{\mu}^{Z,1-loop}$: when 1-loop corrections are included, the bare V-A vertex gets dressed and expands into 6 form factors, separated into Vector (V_μ) and Axial-Vector (A_μ) sectors:

As shown in the slide table:

Vector Sector: Contains the vector $F_1(q^2)$ (linked to the CVC hypothesis), the weak-magnetic $F_2(q^2)$, and the induced scalar $F_3(q^2)$ (which vanishes under exact isotopic G-symmetry).

Axial Sector: Contains the dominant axial $G_1(q^2)$ ($g_A \approx 1.27$), the induced pseudotensor $G_2(q^2)$, and the pseudoscalar $G_3(q^2)$ (governed by the PCAC hypothesis).

Current type	Form Factor	Title/Description	Status in the SM
Vector (1st class)	$F_1(q^2)$	Vector Form Factor	Allowed; related to EM form factors via the CVC hypothesis (The weak vector current and the isovector part of the electromagnetic current combine into a unified isovector electroweak current)
Vector (1st class)	$F_2(q^2)$	Weakly magnetic Form Factor	Allowed; similar to the Pauli magnetic form factor
Vector (2nd class)	$F_3(q^2)$	Induced Scalar	Vanishes with exact isotopic G-symmetry
Axial (1st class)	$G_1(q^2)$	Axial–Vector	Allowed; dominant axial contribution ($g_A \approx 1.27$)
Axial (2nd class)	$G_2(q^2)$	Induced Pseudotensor	Vanishes with exact isotopic G-symmetry
Axial (1st class)	$G_3(q^2)$	Pseudoscalar Form Factor	Allowed; recorded by the PCAC hypothesis and the pion pole

Weak Neutral Vertex (Z^0)

At the **1-loop level** ($\mathcal{O}(\alpha)$ radiative corrections), the weak neutral vertex function $\Gamma_\mu^{Z,1-loop}(p',p)$ gets "dressed" by virtual particle fluctuations.

Instead of remaining a simple local V-A point-like coupling with constant couplings, the 1-loop vertex expands into a **full, momentum-dependent (q^2) structure** containing all non-vanishing Dirac basis operators allowed by symmetry.

For an on-shell spin-1/2 fermion f ($p^2 = p'^2 = m_f^2$) interacting with a Z^0 boson (where $q = p' - p$), the most general 1-loop vertex function is decomposed into **6 scalar form factors**:

$$\Gamma_\mu^{Z,1\text{-loop}}(p',p) = \underbrace{\left[\gamma_\mu F_1^Z(q^2) + \frac{i\sigma_{\mu\nu}q^\nu}{2m_f}F_2^Z(q^2) + \frac{q_\mu}{2m_f}F_3^Z(q^2)\right]}_{\text{Vector Sector } (V_\mu)} + \underbrace{\left[\gamma_\mu\gamma_5 G_1^Z(q^2) + \frac{i\sigma_{\mu\nu}q^\nu\gamma_5}{2m_f}G_2^Z(q^2) + \frac{q_\mu\gamma_5}{2m_f}G_3^Z(q^2)\right]}_{\text{Axial-Vector Sector } (A_\mu)}$$

Diagrammatic Analysis & Results

To calculate full neutrino-matter scattering, we evaluated 1-loop diagrams using FeynCalc. The slide displays the primary 1-loop topologies:

- **Box diagrams (ZZ and WW exchange):** Two-boson exchanges between the neutrino and target quarks.

- **Vertex corrections and self-energies:** Loops containing $W^{\pm}, Z^{0}$, and leptons.

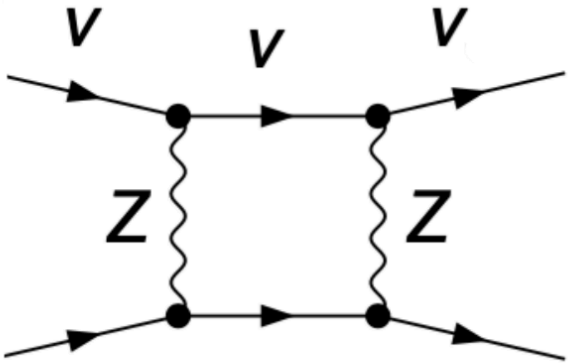

Our calculations demonstrate that the combined contribution of electroweak corrections and the electromagnetic charge radius to the differential DIS cross-section reaches several percent. Neglecting these effects in precision experiments leads to systematic bias when extracting oscillation parameters and Standard Model constants

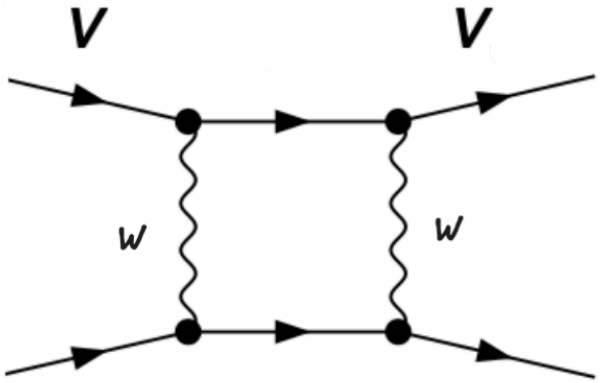

Results

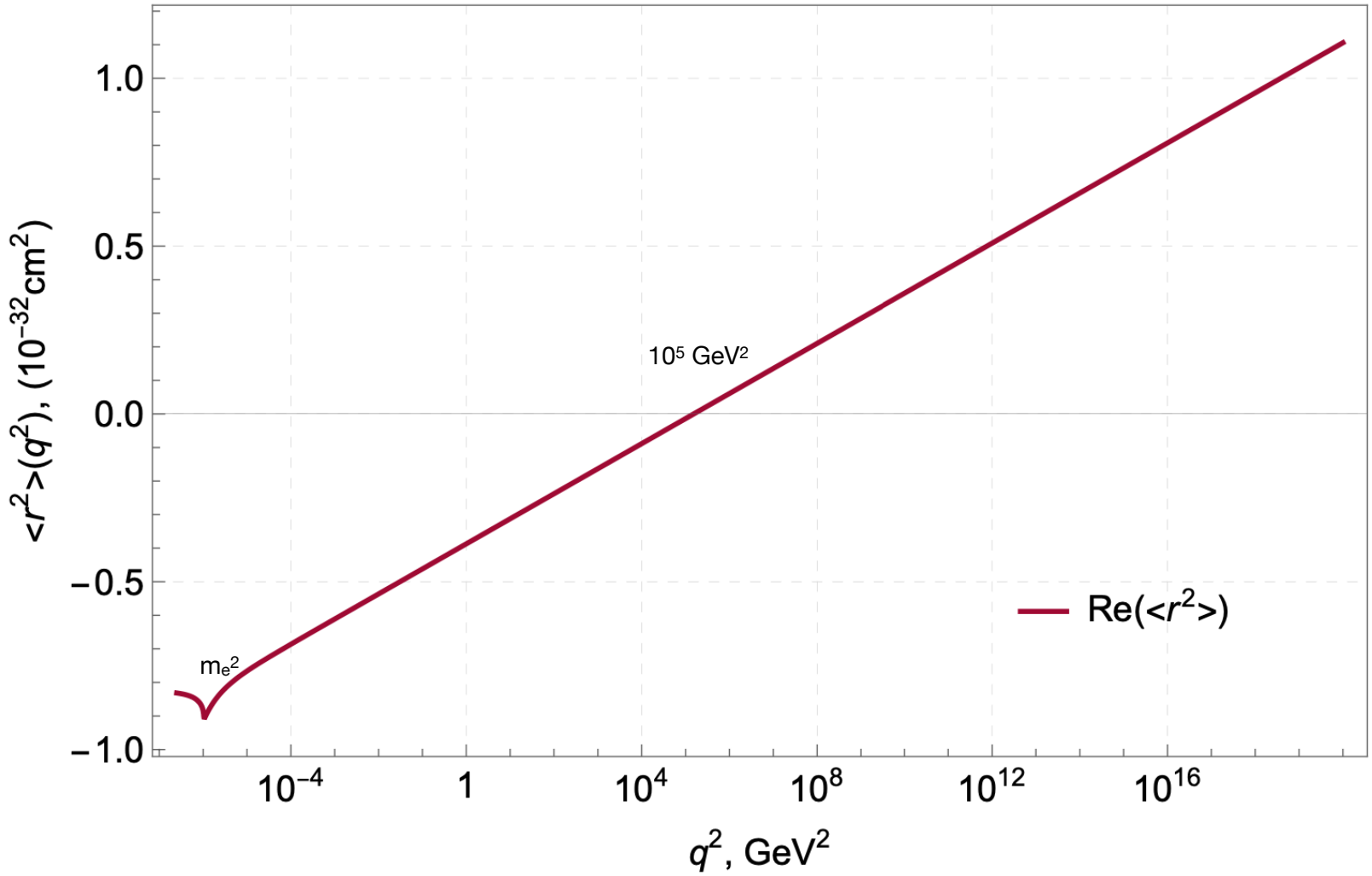
1.0
0.5
0.0
−0.5
−1.0
$<r^2>(q^2)$, (10^{-32}cm^2)
10^5 GeV^2
m_e^2
Re($<r^2>$)
10^{-4}
1
10^4
10^8
10^{12}
10^{16}
q^2, GeV^2

Results

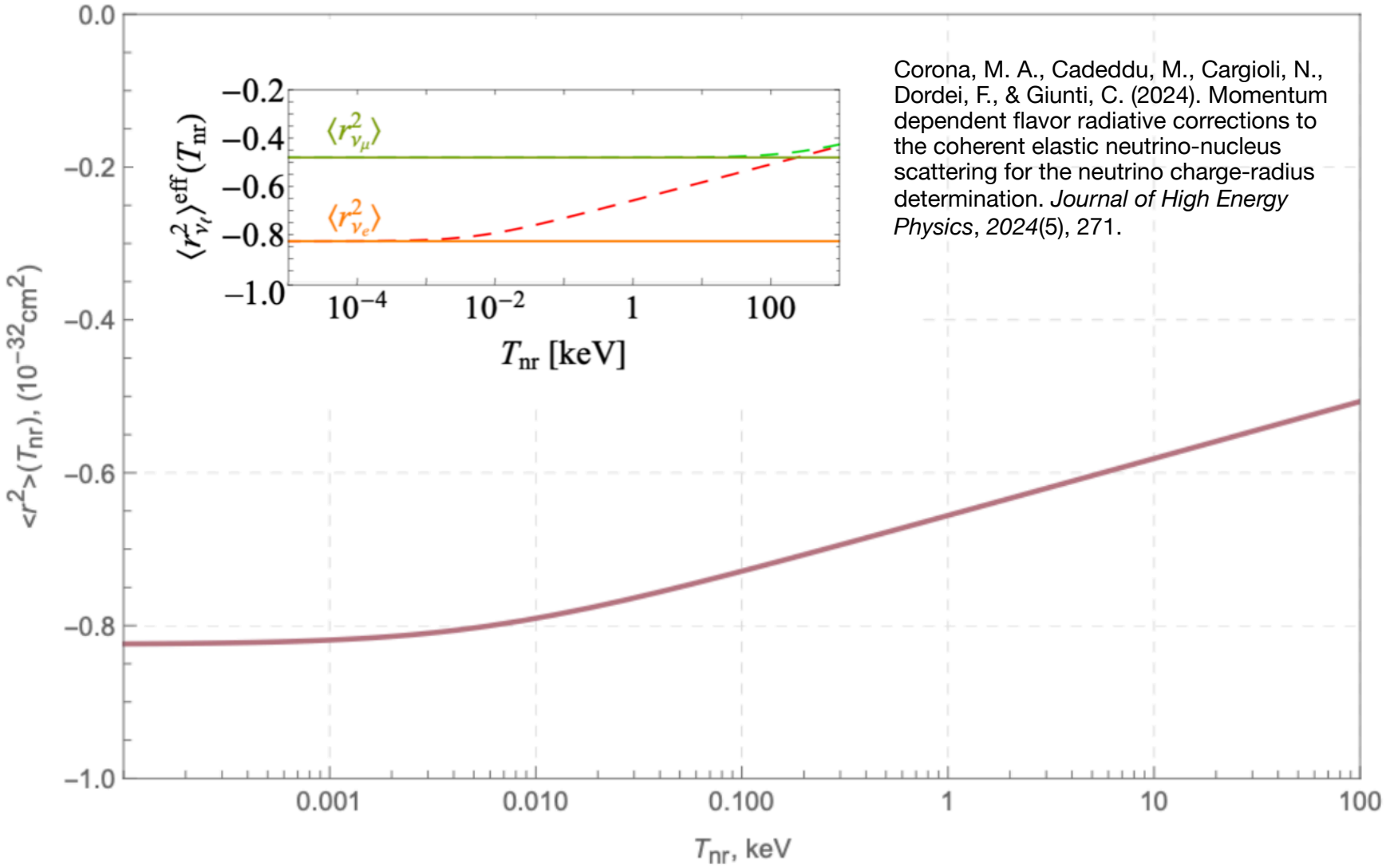

Corona, M. A., Cadeddu, M., Cargioli, N., Dordei, F., & Giunti, C. (2024). Momentum dependent flavor radiative corrections to the coherent elastic neutrino-nucleus scattering for the neutrino charge-radius determination. *Journal of High Energy Physics*, *2024*(5), 271.

Results

$F_m(q^2)$ — **Magnetic Form Factor:**

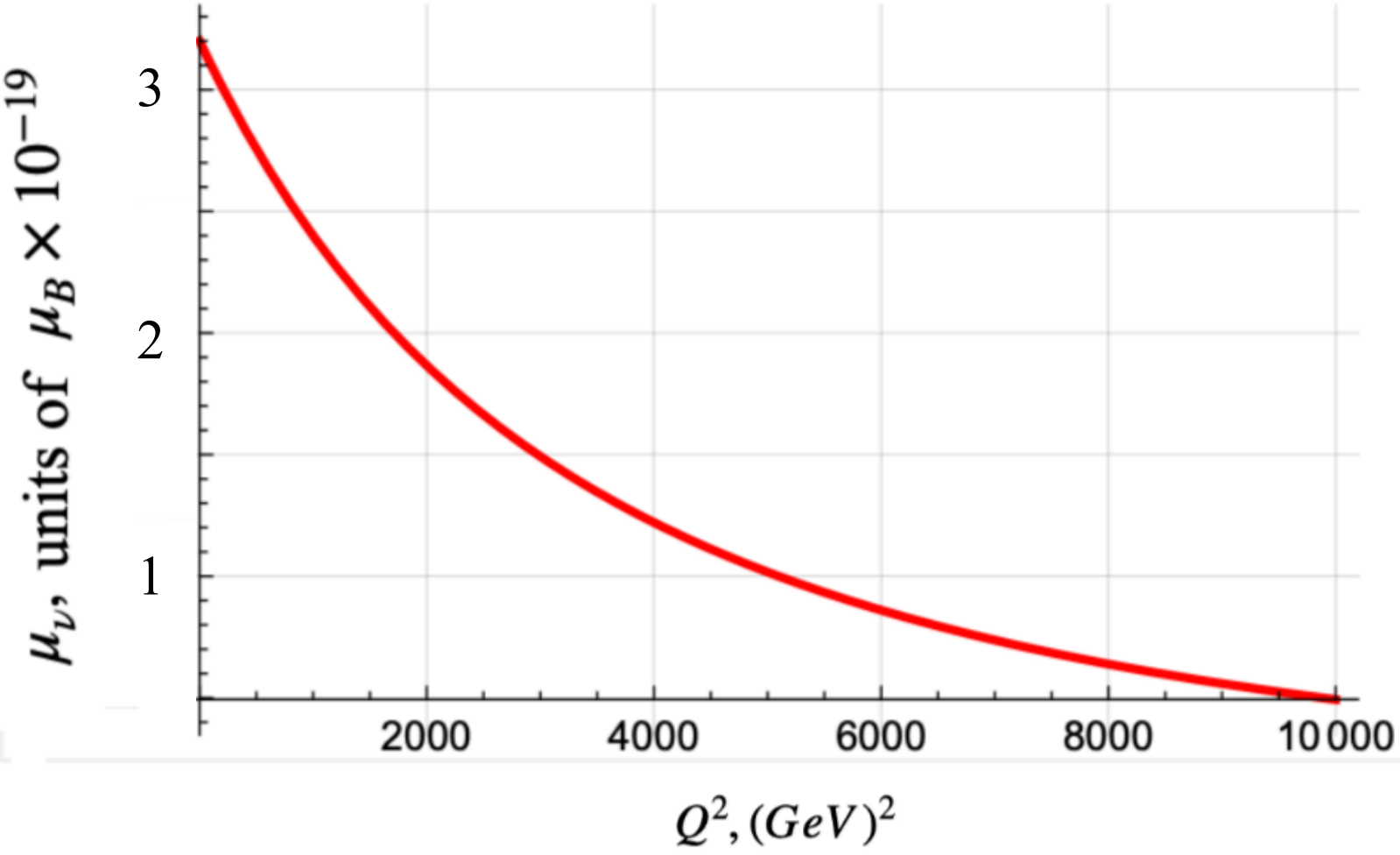



The main takeaways of this work:

- We performed a systematic theoretical analysis of high-energy neutrino scattering on matter, simultaneously accounting for 1-loop electroweak corrections and neutrino electromagnetic properties.

- We decomposed the vertex functions over the Clifford algebra basis and derived analytical expressions for the form factors.

- We evaluated the Q^2-dependence of both the electroweak charge radius $\langle r^2 \rangle$ and the magnetic form factor.

- We proved that including corrections at the multi-percent (2-5%) level is essential for the correct interpretation of data in 1%-precision experiments.


Thank you for your attention!